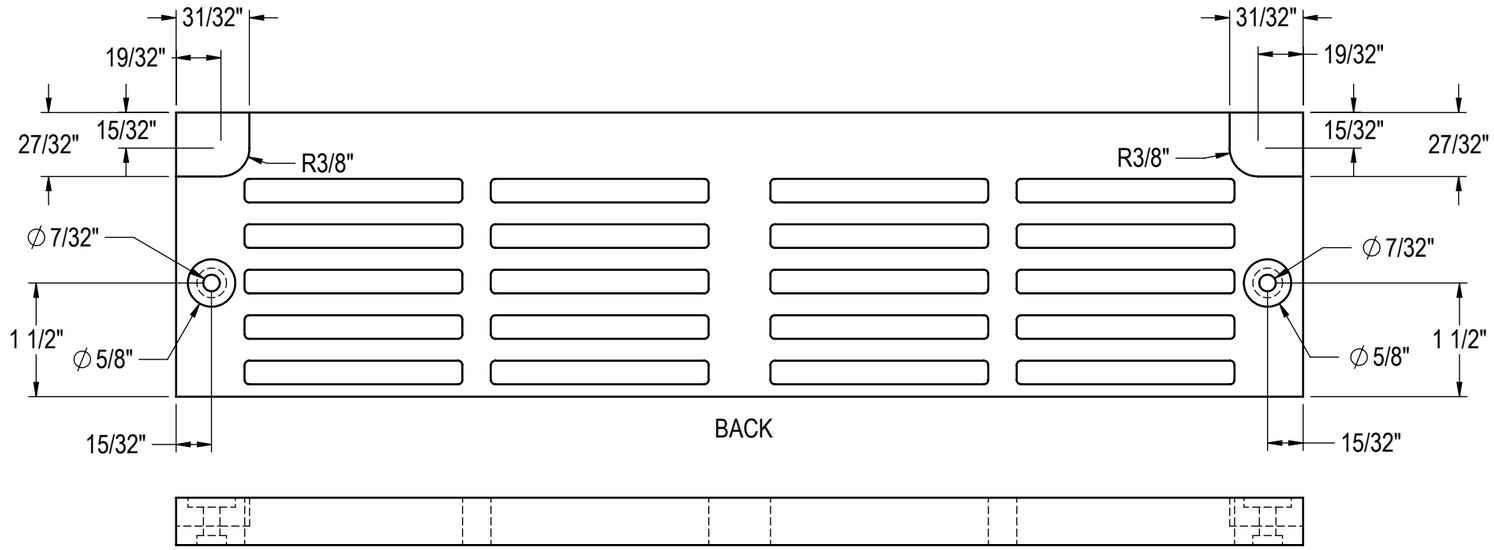

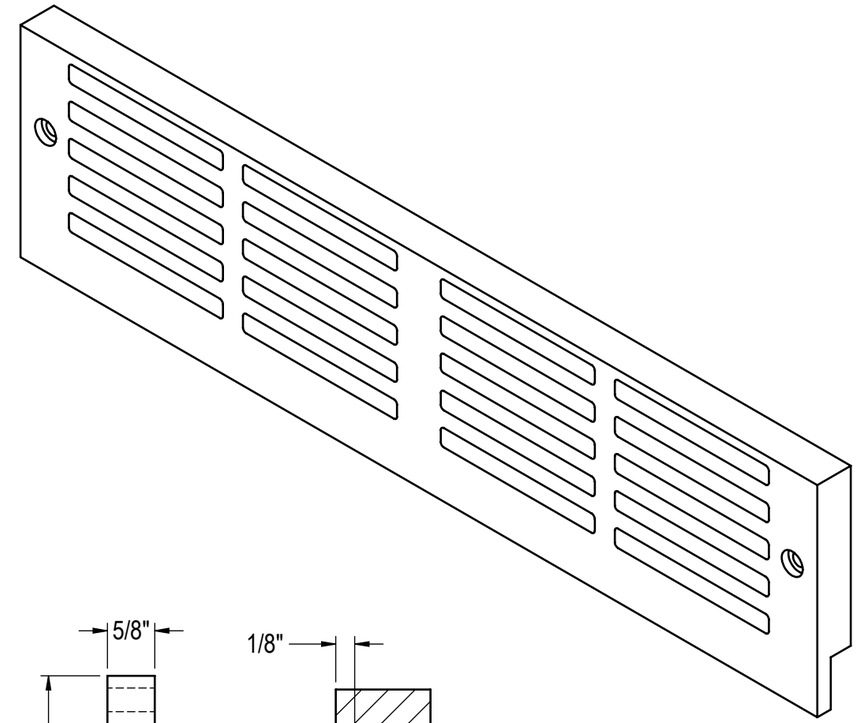

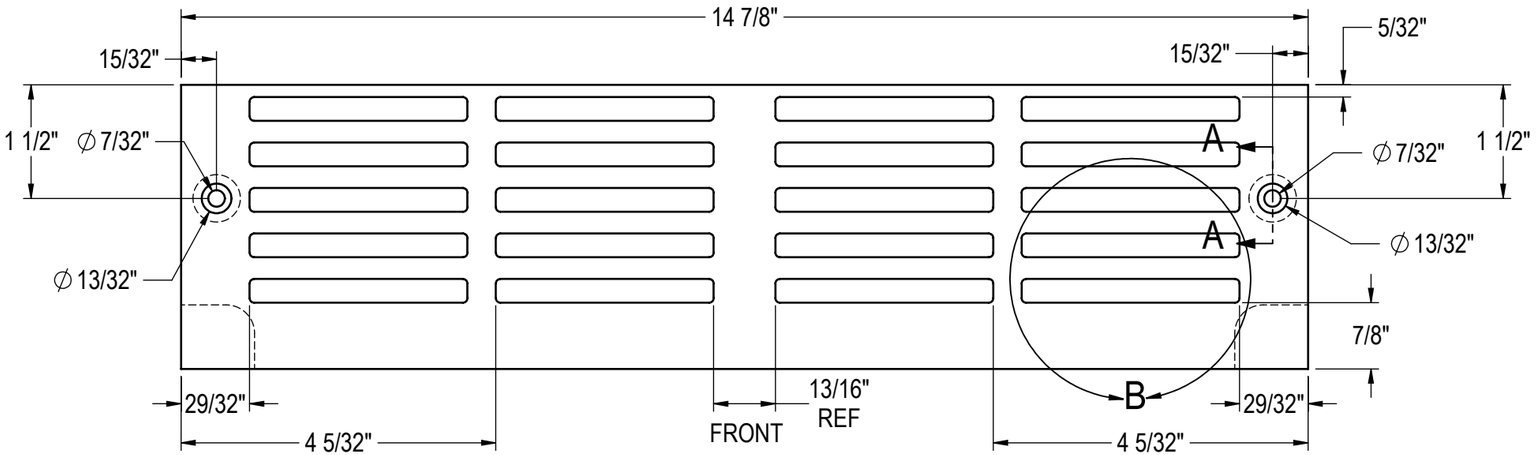

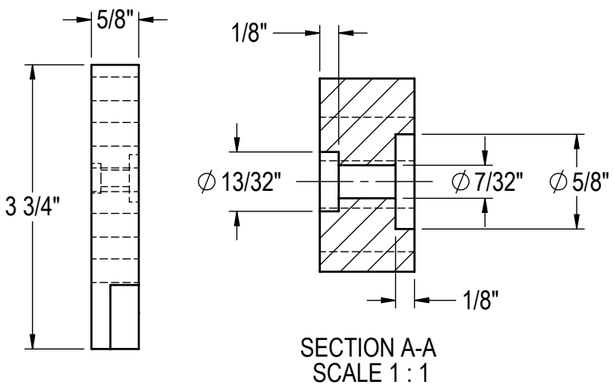

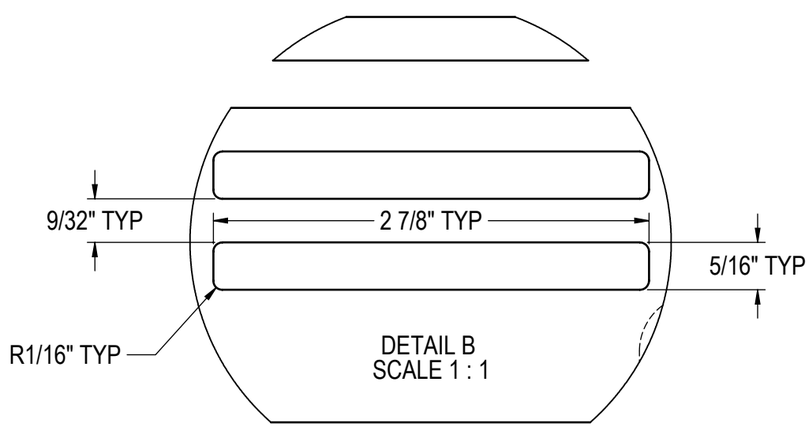

REVISIONS	
4/23/2008	

UNLESS OTHERWISE SPECIFIED:	SIGNATURES		DATE
DIMENSIONS ARE IN INCHES TOLERANCES: .X= , .XX = , .XXX = , ANGULAR: ±1.0°, FRACTIONS: ±1/16 BREAK SHARP EDGES - 015 X 45°. RADIUS SHARP FILLETS - .015 TO .031	DESIGNED	DAS	2/28/2012
	DRAWN	DAS	2/28/2012
	CHECKED		2/28/2012

MATERIAL:	QTY.:
WOOD	FINISH:

Perlick Corporation
Milwaukee, Wisconsin

TITLE: WOOD GRILL H50IM

REFERENCE:

PART NO. WOOD GRILL - H50IM

DWG NO. **WOOD GRILL - H50IM**

PURCHASE REC.: SCALE = 1:2 SHEET 1 OF 1

THIS DOCUMENT / PUBLICATION / SOFTWARE / DRAWING CONTAINS PROPRIETARY INFORMATION WHICH IS THE PROPERTY OF THE PERLICK CORPORATION. IT MAY NOT BE REPRODUCED OR TRANSMITTED IN ANY FORM, ELECTRONIC OR MECHANICAL, INCLUDING PHOTOCOPYING, RECORDING, OR USED IN ANYINFORMATION STORAGE, TRANSMISSION, OR RETRIEVAL SYSTEM, WITHOUT WRITTEN PERMISSION FROM THE PERLICK CORPORATION. COPYRIGHT 2001 PERLICK CORPORATION. ALL RIGHTS RESERVED.